Sandia National Laboratories July/Aug 2002 Volume 24, No. 4

Embedded Mirror Enables Efficient Pumping of Fiber Lasers and Amplifiers

Rare-earth-doped fiber lasers and amplifiers are finding widespread use in applications that require compact, rugged optical sources with high beam quality. Fiber sources are typically pumped with diode lasers, which are very efficient and inexpensive. In a conventional fiber laser, both the pump and signal beams are confined to the core of the fiber, which is very small (<10 µm diameter) to ensure single-mode operation. In a double-clad (DC) fiber, however, the core is surrounded by a large (>100 µm), multimode secondary core (the "inner cladding"), into which the pump light is launched. The advent of DC fiber has allowed the use of high-power, low-cost, multimode pump diodes, which has enabled fiber sources to be scaled to average powers in excess of 500 W. Although several methods have been developed to couple pump light into the inner cladding, efficient pumping of DC fiber remains a significant challenge for many important applications.

Dahv Kliner of Sandia and Jeff Koplow and Sean Moore of the Naval Research Laboratory are developing fiber sources for a variety of chemical-sensing applications. Recently, they invented a new method for pumping DC fibers with diode lasers, diode bars, or fiber-coupled pump sources. In this approach, called "embedded-mirror side pumping" (EMSP), a mirror is embedded in a channel polished into the inner cladding of a DC fiber (Figure 1). The pump source is brought into close proximity to the mirror without intervening optical elements, and the pump beam is launched into the inner cladding by reflection from the mirror.

The new method has been used to construct high-power fiber amplifiers operating in the 1050-nm- and 1550-nm-wavelength regions, which are useful for a number of current and future projects. For example, over 5 W of output power was obtained with <20 W of electrical power delivered to the pump diodes. Tom Kulp, Karla Armstrong, and Ricky Sommers of Sandia are currently using this amplifier to pump an optical parametric oscillator, which provides the tunable infrared radiation required for imaging natural-gas leaks.

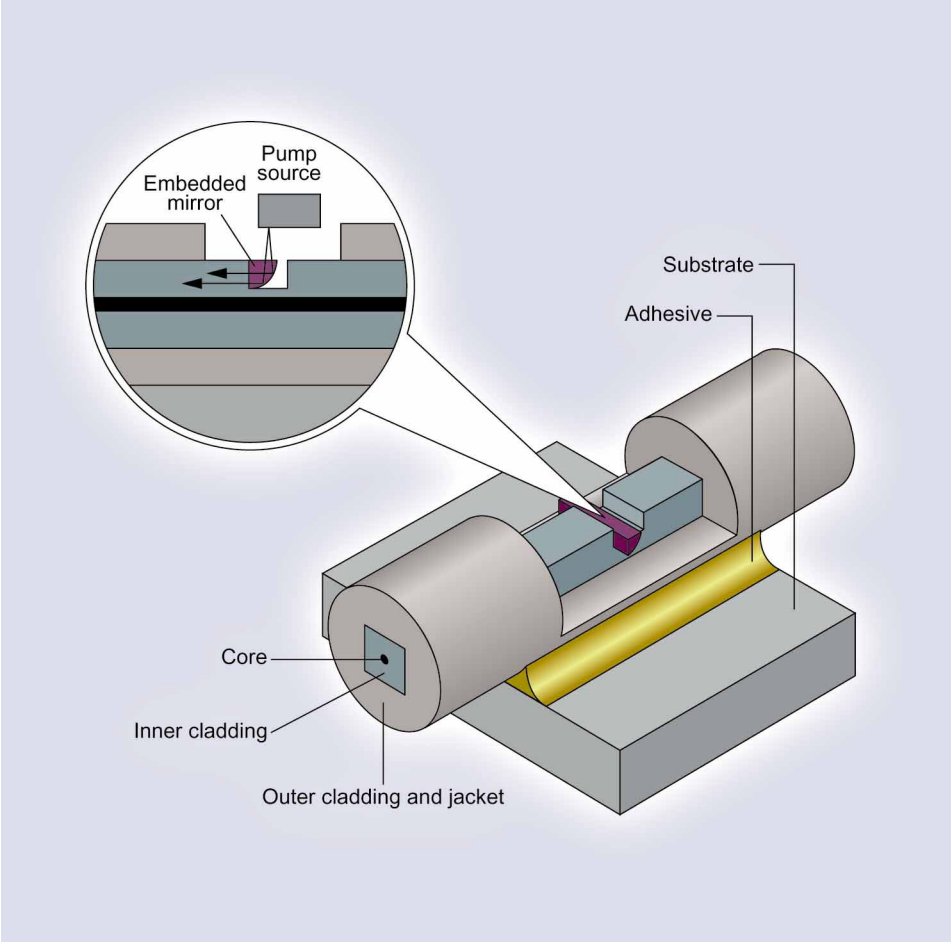

Figure 1. Embedded-mirror side-pumping is a new way to pump double-clad fiber lasers and amplifiers. As shown in the figure, pump light is directly introduced into the inner cladding through a mirror embedded in a slot in the inner cladding. The inner cladding can have a variety of different shapes (square for instance) and the outer cladding imparts the desired optical properties to the inner cladding while providing a protective coating.

The following table lists some important considerations in evaluating the suitability and practicality of a pumping scheme for a given application. EMSP simultaneously addresses all of the key requirements. For instance, the coupling efficiency is high (typically 80%), the required components and the mounting/alignment hardware are minimal, the alignment tolerances are large (approximately 10 times larger than alternative methods), and the technique is compatible with a wide variety of pump sources and DC fibers.

DESIGN GOAL	BENEFIT
High coupling efficiency	Enables high electrical and optical efficiencies; minimizes waste heat generation
Large alignment tolerances	Facilitates implementation; ensures long-term stability and reliability
Compactness and simplicity	Critical for portable instrumentation and other practical applications
Scalability	Allows output power to be increased by using larger, more powerful pump sources or multiple pump sources
Compatibility with a variety of pump sources and DC fiber designs	Provides wide generality
No obstruction of fiber ends	Permits coupling of the signal beam into and out of the fiber core; provides flexibility in cavity design

Awards

CRF Summer Intern Thomas Cauley Wins Iowa State's Mal Iles Award

Summer intern Thomas (Trey) Cauley has won the 2002 Mal Iles Award for work done at Sandia during his internship. The award, which is given to Iowa State University undergraduate students who show unusual interest in innovations and inventions, honors Mal Iles, an Iowa State graduate student in physics. Iles was already known as an innovative and inventive scientist when he died suddenly and unexpectedly in 1983. In his work at Sandia, Trey, who is majoring in Mechanical Engineering, invented a better way to inject multiple solid fuels simultaneously into the MFC (Multifuel Combustor), designed a dilution system for use in fine-particle collection experiments, and developed a suite of computer programs that modeled key MFC behaviors.

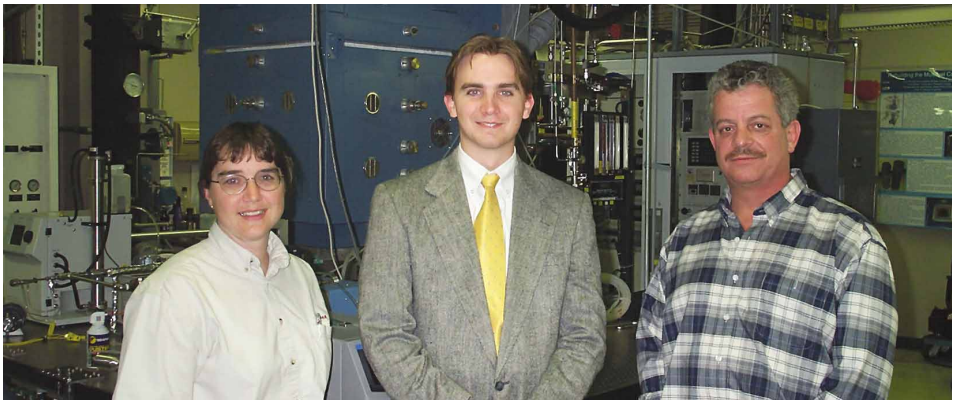

Mal Iles Award winner Trey Cauley (center) with Multifuel Combustor coworkers Linda Blevins and Gian Sclippa.

Mark Allendorf Elected Electrochemical Society Fellow

In May of this year, Mark Allendorf was elected a Fellow of The Electrochemical Society. The award, which will be presented at the Fall Meeting of the Society at Salt Lake City, Utah, honors scientific contributions in the field of electrochemistry. The Electrochemical Society is an 8000-member international society founded in 1905 and devoted to solid state and electrochemical sciences. Election is a singular honor currently granted to only 120 members. In electing him a Fellow, the Board of Directors cited "diverse and sustained contributions to the understanding of high-temperature processes involving interfaces, including chemical vapor deposition, refractory corrosion, and catalysis." Mark is a Distinguished Member of the Technical Staff at Sandia.

Newly elected Electrochemical Society Fellow Mark Allendorf. In his career at Sandia, Mark has published over 80 papers in the scientific literature, hosted numerous postdoctoral associates and visitors in his laboratory, and held several offices in professional societies.

Visitors

Visitors

Anouk Rijs, a PhD student from Vrije University in the Netherlands, worked with Carl Hayden in the Combustion Chemistry Department experiments performing ultrafast energy- and angle-resolved photoelectron-photoion coincidence imaging.

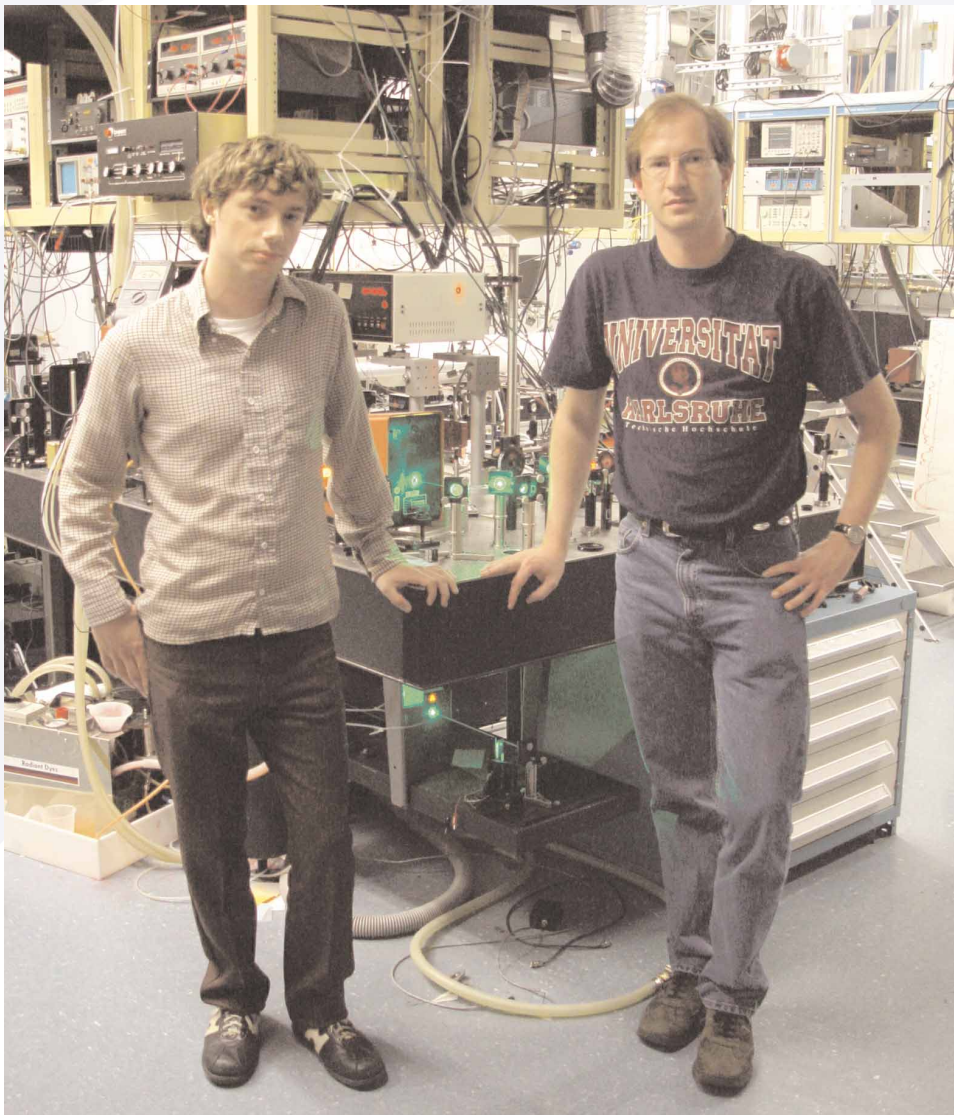

Jared Smith, left, has been working in Craig Taatjes's laboratory since August 2001 as an undergraduate research associate. He has used infrared laser spectroscopy to investigate Cl atom reactions and alkyl + O_2 reactions. He will leave to begin graduate studies at the University of California, Berkeley, in August 2002. Frank Striebel, right, is a postdoctoral associate from University of Karlsruhe in Germany. He has been working in Craig's lab as a researcher since May 2001, using visible laser absorption methods to measure elementary reaction kinetics of vinyl and allyl radicals. He will depart in July 2002 to take a faculty position at his alma mater.

The CRF News is Published bimonthly by the Combustion Research Facility, Sandia National Laboratories, Livermore, California, 94551-0969.

Director: William J. McLean, Mail Stop 9054

Editors: Howard Lentzner, Email: hllentz@sandia.gov
Jessica Matto

Graphic Artist: Daniel Strong

Low-Pressure Flame Structure Studies with VUV Photoionization Mass Spectrometry Initiated at the Advanced Light Source

A new flame-sampling molecular-beam mass spectrometer is operational and has undergone its first run on the Chemical Dynamics Beamline of the Advanced Light Source (ALS) at Lawrence Berkeley National Laboratory (LBNL). Both stable and radical species were detected in initial experiments with ethylene/oxygen/argon flames.

The new instrument exploits the tunable, high-flux vacuum ultraviolet photon beam at the ALS and is expected to significantly expand our understanding of combustion chemistry. Professor Terry Cool of Cornell University, Professor Phil Westmoreland of the University of Massachusetts, and Andy McIlroy of Sandia, with the assistance of Sandia postdoctoral researcher Fei Qi, and LBNL scientists Musa Ahmed and Darcy Peterka collaborated in building the new instrument.

Molecular beam sampling mass spectrometry (MBMS) has proved to be a powerful technique for elucidating combustion chemistry by probing the structure of low-pressure laminar flames. Conventional MBMS has relied on electron-impact ionization and quadrupole mass spectrometers for detection.

While such systems have been important research tools, they are not adequately accurate for detecting and identifying species with low ionization energies such as larger-mass species and many radicals. Electron-impact ionization does not work well at ionization energies below ~10 eV because electron flux is generally low, and the spread of electron energies becomes relatively wide with resolution of <0.1 eV. Another inherent difficulty with electron-impact ionization is that the electron ionization cross sections rise slowly near threshold. Yet to avoid fragmentation, this is precisely the region that is most attractive for probing a mixture of species.

Single-photon, vacuum ultraviolet (VUV) photoionization has been an attractive alternative because photoionization cross sections rise rapidly near threshold, often in a near step function, enhancing near-threshold detection efficiencies.

Figure 1. (From left to right) Cornell University Professor Terry Cool, University of Massachusetts Professor Phil Westmoreland, Andy McIlroy, and Musa Ahmed of LBNL in front of the experimental chamber of Endstation 3 on the Chemical Dynamics Beamline at the Advanced Light Source at LBNL (team members Fei Qi and Darcy Peterka are not pictured). The beamline produces an intense source of vacuum ultraviolet light and is ideally suited for detecting combustion intermediates and products in low-pressure flames.

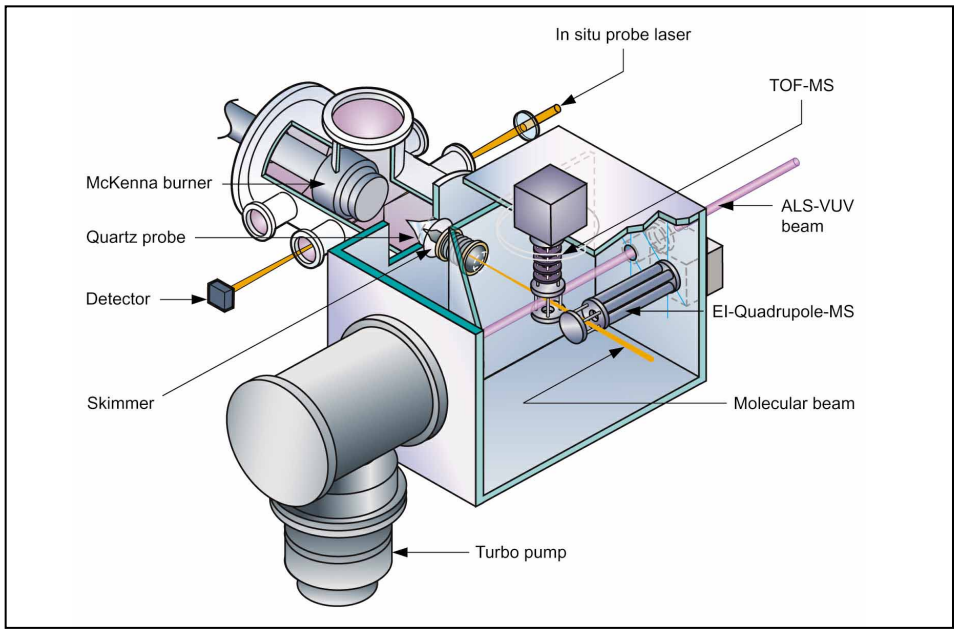

Figure 2. The new flame-sampling molecular-beam mass spectrometer has provisions for in-situ optical diagnostics, thermocouple temperature measurements, and an on-line electron-impact quadrupole mass spectrometer. The burner and sampling probe geometry of the new spectrometer parallels that of the instrument in use at the CRF. (See CRF News, Nov/Dec 2000).

Lasers have also been used to produce tunable VUV radiation with resolving power of >10,000. However, photon fluxes have remained relatively low, ~10^{10} photon/s for the 100-Hz optical parametric oscillator system in use at the CRF.

The Chemical Dynamics Beamline at ALS offers the enticing combination of high resolution, >1000, and high photon flux, ~10^{12} photon/s for our studies of combustion in low-pressure flames. The burner and sampling probe geometry of the new system replicates that of MBMS systems currently in use at Sandia and Cornell University in order to facilitate comparisons between instruments and to allow developmental work to be carried out away from the ALS where beam time for the instrument is limited (see Figure 1).

During the first run in March data were taken with both wideband (resolution=10) direct undulator radiation and with narrow band (resolution=1000) monochromator filtered radiation. Stable species and a variety of radicals were detected. Species up to mass 200 amu were seen in rich ethylene flames and are tentatively assigned to substituted naphthalenes. The mass spectra show the expected disappearance of background interference with a decrease of photon energy from 13 to 10 eV (Figure 2 (a) and (b)). A variety of radical species have also been detected including methyl, formyl, and propargyl. Measurement of the methyl radical relative ionization cross section as a function of energy agrees well with published literature values (see Figure 2c).

During the initial run, several potential improvements were noted, and some facility difficulties with the 3-m monochromator were encountered. Improved detection gating and a wider dynamic range detector will be employed for the next run in June/July 2002. Recent facilities improvements have enhanced the monochromator performance.

The instrument at the ALS is intended to be a user facility, and other interested investigators are encouraged to consider experiments that utilize the new capabilities. In addition to flame structure studies, the facility may be used to measure ionization thresholds and ionization cross sections of novel combustion related species. Another potential use for the system is for other studies of combustion radical spectroscopy.

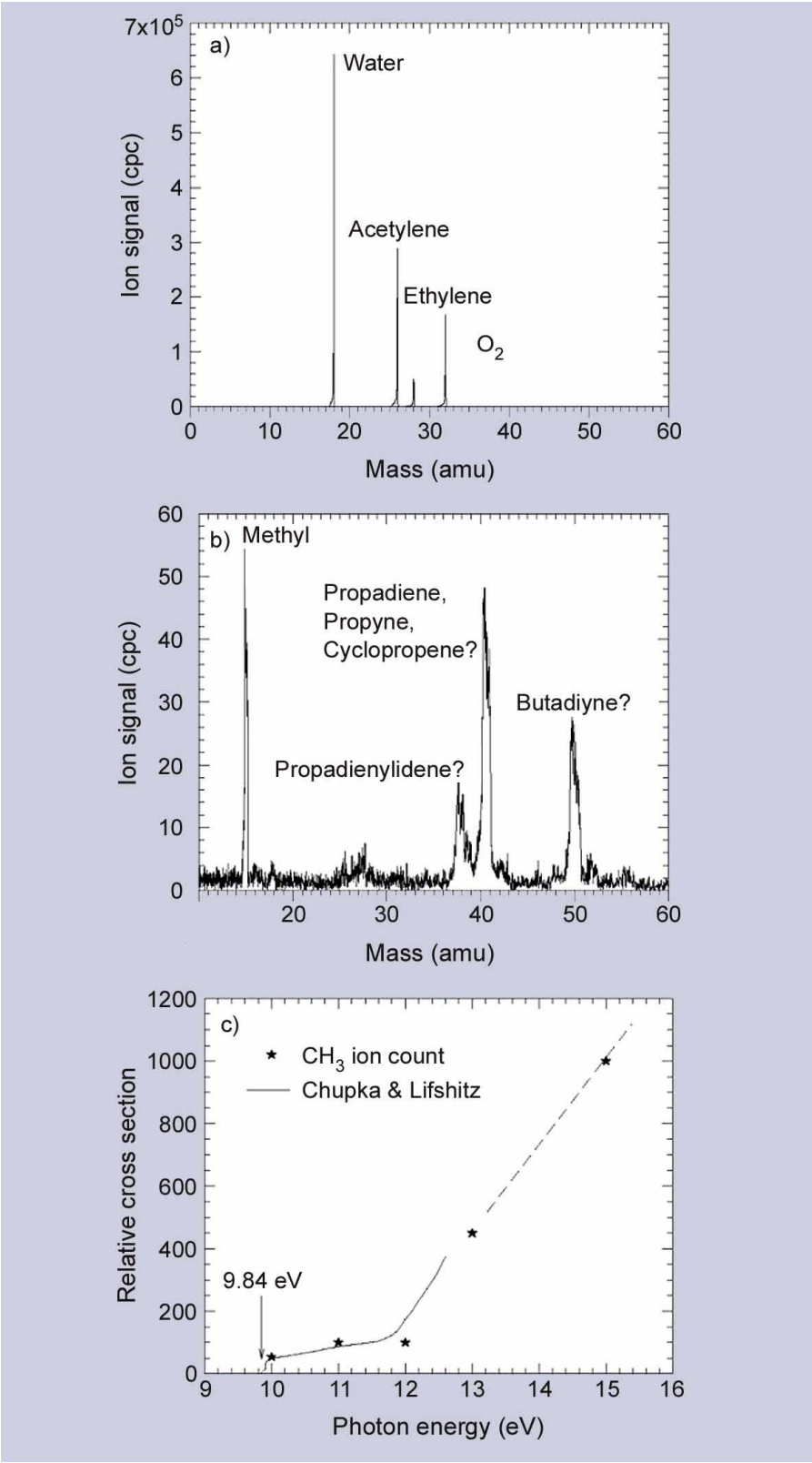

Figure 3. Mass spectra from the luminous zone of a rich ethylene/oxygen/argon flame with tentative assignments for several peaks. At a photon energy of 13 eV (a), which is high enough for dissociation, background interference masks the presence of unstable flame products seen at 10 eV (b). Plot (c) shows that the relative methyl radical signal as a function of ionization energy agrees with the previous measurements of Chupka and Lifshitz.

Sandia Hosts Soot Modeling Workshop

Sandia hosted the Fifth Annual Workshop on Soot Modeling at its Combustion Research Facility from April 30–May 1, 2002. Motivated by the needs of the Accelerated Strategic Computing Initiative (ASCI) program's pool-fire modeling and simulation activities, the event enabled experts from academia and industry to meet with members of the Sandia and University of Utah ASCI fire-modeling teams to discuss computational and experimental progress and future needs. Chris Shaddix coordinated the overall event, which drew about 50 attendees including several from Europe.

Sandia National Laboratories
Mail Stop 9056
P.O. Box 969
Livermore, California 94551-0969

http://www.ca.sandia.gov/CRF/

Sandia is a multiprogram laboratory operated by Sandia Corporation, a Lockheed Martin Company, for the United States Department of Energy under contract DE-AC04-94AL85000

Sandia National Laboratories

TEMP - RETURN SERVICE REQUESTED

PRESORTED
FIRST CLASS
U.S. POSTAGE
PAID
MODESTO, CA
PERMIT NO.16